ChromaFlex CF-QRRX
Quad Receiver Module

Installation and Operation Guide

CF-QRRX Quad Return Receiver
Document Number: 99-01-0004 Rev A

A	01/19/2016	Initial Release

Table of Contents

1. Product Introduction 2
2. Unpacking and Inspecting a New Unit 2
   2.1. What to do about physical damage 3
   2.2. What to do about concealed damage 3
   2.3. How to return equipment 3
3. Specifications 4
4. Block Diagram and Operation 5
5. Front Panel 7
   5.1. Front Panel Illustration 7
   5.2. Table of Front Panel Features 7
   5.3. Alarm Status Indicators (CF-QRRX-S) 8
6. Module Installation 9
7. Module Connections 9
   7.1. RF Connections 9
   7.2. Optical Connections 10
8. Module Setup 11
   8.1. Setup 11
9. Troubleshooting the CF-QRRX return receiver module 12

1.

1. Product Introduction

The ChromaFlex CF-QRRX quad return path receiver is a high density, single slot module for the ChromaFlex chassis. Each receiver module incorporates four individual receivers and a wide RF output range. The CF-QRRX is available in a standard sensitivity version for node analog return applications or as a high sensitivity, very low noise version ideal for RFoG applications, utilizing very low optical input levels. Up to eight modules can be installed into the ChromaFlex chassis providing 32 return path receiver RF segments in two rack units (2 RU) of space.

Features of the CF-QRRX receiver include:

- Low noise option with <1.5pA/√Hz and operating range to -30 dBm
- Optical automatic gain control
- Variable attenuation control and plug-in output pad for maximizing levels and performance
- High gain and wide range of RF output level
- Integrated optical express port options including xPON
- Integrated optical demux options to support DWDM return transmitters
- Front panel visual status indicators
- Setup and manage via SNMP, CLI, web GUI, local craft port

The CF-QRRX may include optional integrated optical filters to eliminate external connections and additional rack space consumption. Options include 4 way demux filters to support DWDM return path transmitters or express ports for daisy chaining multiple receivers or interfacing with xPON bi-direction OLT ports.

2. Unpacking and Inspecting a New Unit

Before shipment, InnoTrans Communications inspects and packs all the essential items carefully. Nevertheless, damage may occur during shipment. The carrier assumes full responsibility for a safe delivery of the equipment.

1) Inspect the package for any physical damage.
2) Open the package.
3) Remove any packing material.
4) Inspect the unit for any physical damage.
5) Shake the unit with care, paying attention to any rattling loose parts that may suggest a concealed damage (some noise due to moving cables is normal).
6) Check for any missing accessories.

When any damage is noticed to the merchandise, please notify the InnoTrans Customer Service representative (408-227-3400) and file a claim with the carrier as noted below.

2.1. What to do about physical damage

Record any evidence of physical damage or loss on the freight bill or receipt and have the carrier's agent sign it. If you fail to do so, the carrier may refuse to honor the damage claim. The carrier will supply you with any forms required to file such a claim.

2.2. What to do about concealed damage

Damage which is not apparent until the unit has been unpacked is considered concealed damage. The contents may have been damaged due to rough handling even if there is no external evidence. If you should notice damage upon unpacking the unit you should make a written request for inspection by the carrier's agent within 10 days of the delivery date. Afterwards file a claim with the carrier.

2.3. How to return equipment

Call InnoTrans Communications at 408-227-3400 for a Return Materials Authorization (RMA) number. You will need the unit's serial number, description of the problem, and some shipping information. We must receive the unit within thirty (30) days from the date a RMA number is issued. If for any reason, you want to ship the unit 30 days after the RMA number has been issued, you must obtain a new RMA number by calling InnoTrans Communications. Units received without an RMA number or one with an expired RMA number will not be accepted by our receiving department.

3. Specifications

Parameter	Unit	CF-QRRX-S	CF-QRRX-H	Notes
Input Power Range	dBm	0 to -20	-18 to -30	
Wavelength	nm	1270-1620 nm		
Responsivity	A/W	0.85 @ 1310 nm /0.95 @ 1550		
Equivalent Input Noise	pA/√Hz	<4	<1.5	
RF Passband	MHz	5 to 200	5 to 100	
RF Output Level	dBmV	30 dBmV		1
Maximum RF Output Level		50 (Composite)		
RF Attenuation Range	dB	0 to 30		0.5 dB steps
Optical AGC Range	dB	+3 to -12dBm	-10 to -25dBm	
RF Isolation	dB	>60dB (5 to 200 MHz)	>60dB (5 to 85 MHz)	2
Return Loss	dB	> 16 dB	> 16 dB	
Frequency Response	dB	+/- 1 dB	+/- 1 dB	
RF Test Point	dB	-20		Front Panel
Optical Interfaces	-	LC/APC		
Electrical				
Power Consumption	W	12	14	
Environmental				
Operating Temperature	°C	-20 to +65		
Storage Temperature	°C	-40 to +85		
Relative Humidity		Maximum 85% non-condensing		
Physical				
Dimensions		ChromaFlex 1 slot module		
Management		Local Craft, SNMP, CLI, GUI		

Notes:

1. Standard receiver at -10dBm optical input, 10% OMI on transmitter. High sensitivity receiver at -20dBm optical input, 30% OMI on transmitter. 9 dB output plug-in pad
2. Measured with same optical input level on all 4 receivers

4. Block Diagram and Operation

The following block diagrams depict the RF and optical signal flow through the CF-QRRX Quad Return Receiver module with optional optical express ports and DWDM demultiplexer.

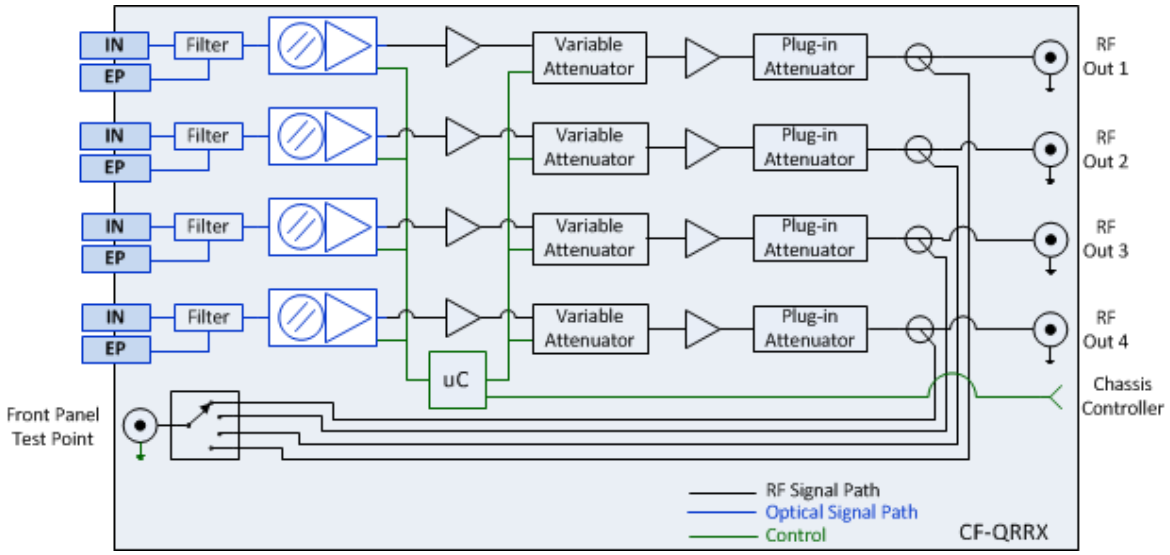

CF-QRRX Quad Return Receiver Module Block Diagram with optional Express Ports

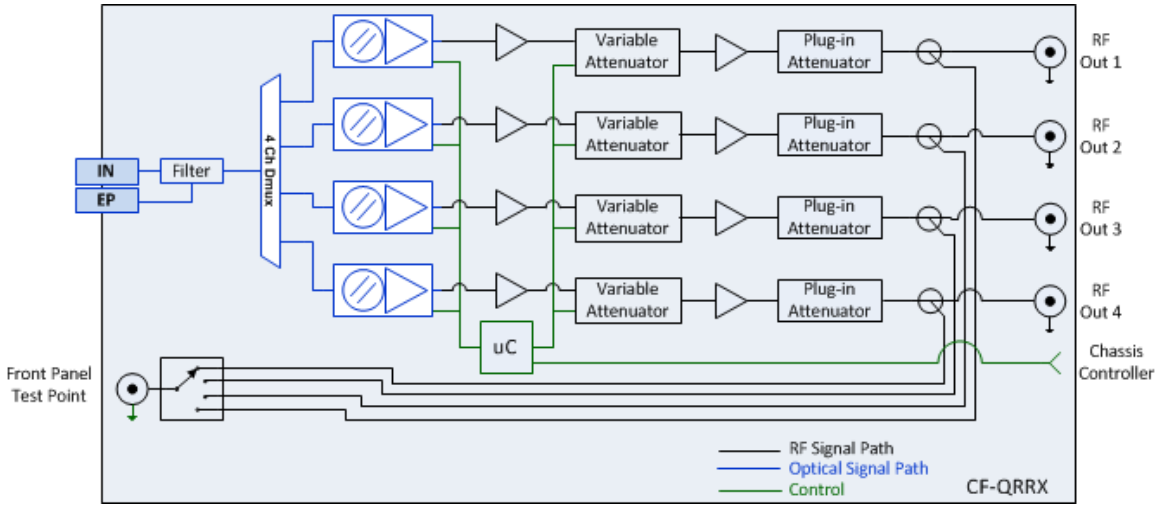

CF-QRRX Quad Return Receiver Module Block Diagram with optional Demux

The CF-QRRX quad return receiver module has four independent receivers in a single module. The optical and RF signal flow is the same for each receiver. An optical signal in the 1270 nm to 1620 nm range is connected to the front panel optical input LC connector. If the receiver was ordered with an optional express port for RFoG and PON OLT combining, only the 1610 nm RFoG return signal is passed to the receiver and the specified reflect band passes through the express port LC connector. The same applies to CF-QRRX receivers ordered with an integrated DWDM de-mux filter. The integrated de-mux accepts four wavelengths on a single optical input connector and de-multiplexes a single wavelength to each of the four receivers.

The desired optical signal first passes to an optical detector where the RF signal is removed from the optical signal carrier. The detector also has an optical monitor which is fed to a microcontroller which provides control to the variable RF attenuator when operated in the AGC mode. The RF output of the photodetector then passes through a first stage of amplification. The output of the amplifier is connected to the variable RF attenuator which can be manually adjusted through the ChromaFlex local craft interface via; the Hand Held Display controller, GUI interface or CLI; or remotely via SNMP, CLI or the web-based GUI. The RF attenuator has a 30 dB range which may be adjusted in 0.5 dB increments. When operated in the “AGC” mode, the variable RF attenuator is controlled by the microprocessor for optimum performance. When the optical input to the photodector is -12 dBm (model CF-QRRX-S after any internal optional filters) the RF attenuator is set to 0 dB. For every 0.5 dB of optical input power above -12 dBm the RF attenuation is increased 1 dB with a range up to up to +3 dBm. The total optical range of the “AGC” is 15 dB optical or 30 dB RF attenuation. If the input level is less than -12 dBm the overall return link noise performance may be degraded. The RF signal then passes through a second amplifier and plug-in pad attenuator. The plug-in attenuator allows you to adjust the RF output level independent of the variable attenuator. The CF-QRRX is shipped with a 9 dB pad installed which yields approximately a 30 dBmV output level when operated in the AGC mode over an optical input range of -12 dBm to +3 dBm. The pad can be adjusted to 0 for approximately 40 dBmV output or increased for lower RF output levels. The plug-in pad will have no effect on the performance of the receiver as it is post active devices.

5. Front Panel

5.1. Front Panel Illustration

The following diagram and table depicts the features of the CF-QRRX return receiver module front panel.

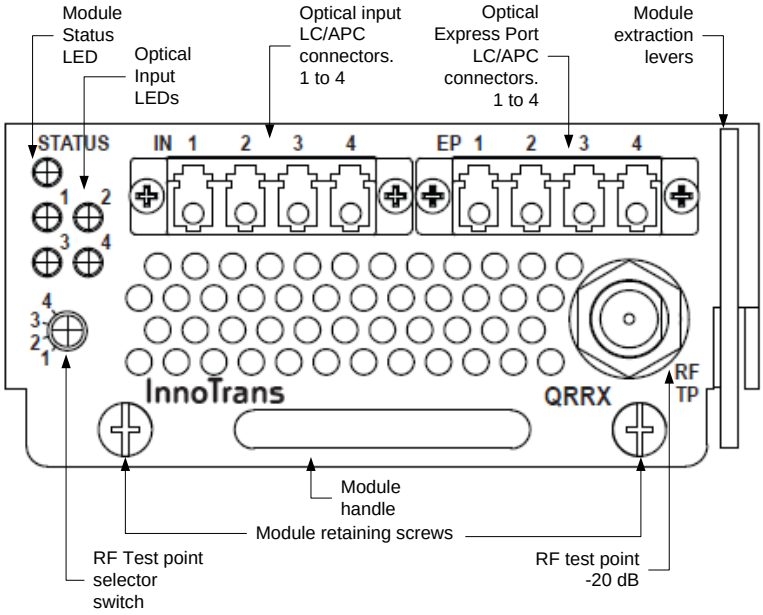

5.2. Table of Front Panel Features

Module extraction lever	Lever to assist in removing the module from the chassis backplane connector.
Module retaining screws	Secures the module to the chassis.
Module handle	Utilized to insert and remove the module.
RF test point	-20 dB sample of the RF output.
RF test point selector switch	Selects the receiver (1 to 4) for the RF test point.
Optical input LC/APC connector (IN)	Optical input signal connection.
(Optional) Express Port (EP)	Utilized to extract or combine additional optical signals to or from other equipment. 1260 to 1620 nm. ***Important Note:* be certain not to combine same channels.**
Status Alarm LED	Visual indicator of module temperature alarm.

Receiver Optical Alarm LEDs	Visual optical power alarm status indicators for each of the four receivers.

5.3. Alarm Status Indicators (CF-QRRX-S)

LED	Function	Value
STATUS	Module temperature	Green = Normal Amber = Minor Temp alarm Red = Major Temp alarm
1,2,3,4	One LED for each receiver 1 thru 4. Monitors the optical input to each receiver.	Green = Normal Amber = Minor alarm +/- 2 dB out of range Red = Major alarm +/- 3 dB out of range

6. Module Installation

The CF-QQRX return receiver module occupies a single ChromaFlex chassis module slot. The modules may be inserted or removed while the chassis is powered without interrupting other operational modules in the chassis. The following module installation procedures assume the chassis is installed and powered following the instructions in the ChromaFlex Chassis Installation and Operational Guide document # 99-02-0001.

1. Align the module into the desired slot opening in the ChromaFlex chassis.
2. Using the handle push the module into the slot with even pressure until the module is mated with the chassis mid-plane connector.
3. Press the module extraction levers downward against the module face.
4. Tighten the two module retaining screws until snug in an even manner.
5. The module Status LEDs should now be lit green and the four optical power LEDs red if an optical input has not already been connected to the module. Note, each LED will cycle through all colors during a power up cycle.

7. Module Connections

The following describes the initial RF and optical connections to the chassis and module.

7.1. RF Connections

RF connections are made at the back of the ChromaFlex chassis. Each module has four independent RF output connections, one per receiver.

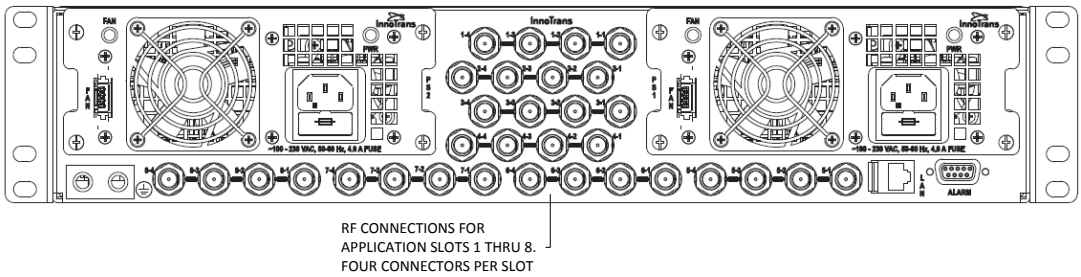

The following table and diagram shows the corresponding RF connectors to module slots for the CF-QRRX receiver module.

Module Slot	Rear Panel Connector	QRRX
1	1-1	Output 1
	1-2	Output 2
	1-3	Output 3
	1-4	Output 4
2	2-1	Output 1
	2-2	Output 2
	2-3	Output 3
	2-4	Output 4
3	3-1	Output 1
	3-2	Output 2
	3-3	Output 3
	3-4	Output 4
4	4-1	Output 1
	4-2	Output 2
	4-3	Output 3
	4-4	Output 4
5	5-1	Output 1
	5-2	Output 2
	5-3	Output 3
	5-4	Output 4
6	6-1	Output 1
	6-2	Output 2
	6-3	Output 3
	6-4	Output 4
7	7-1	Output 1
	7-2	Output 2
	7-3	Output 3
	7-4	Output 4
8	8-1	Output 1
	8-2	Output 2
	8-3	Output 3
	8-4	Output 4

Example connections for a CF-QRRX populated in slot 1 & 2.

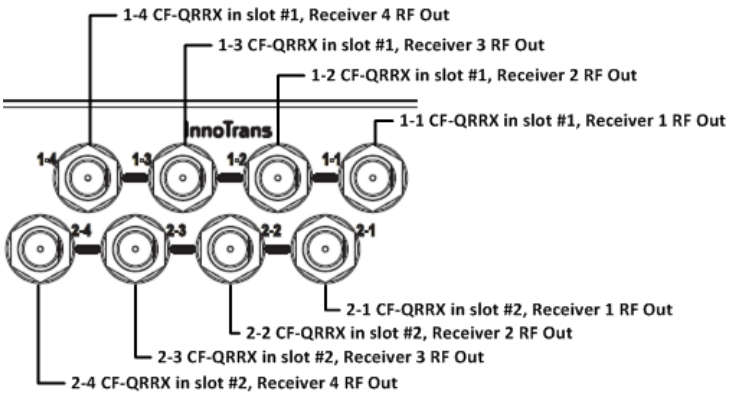

7.2. Optical Connections

The CF-QRRX return receiver has four optical input ports, one for each receiver, and may have four optional optical express ports which may filter or reflect additional optical signals to other equipment.

Please follow your specific design schematic for interconnecting additional equipment while paying attention to the optical levels specified for your application.

Important Note: ***Always clean and inspect optical connectors prior to making a connection to the CF-CQRRX optical ports. Never look into an optical connector when a signal is present.***

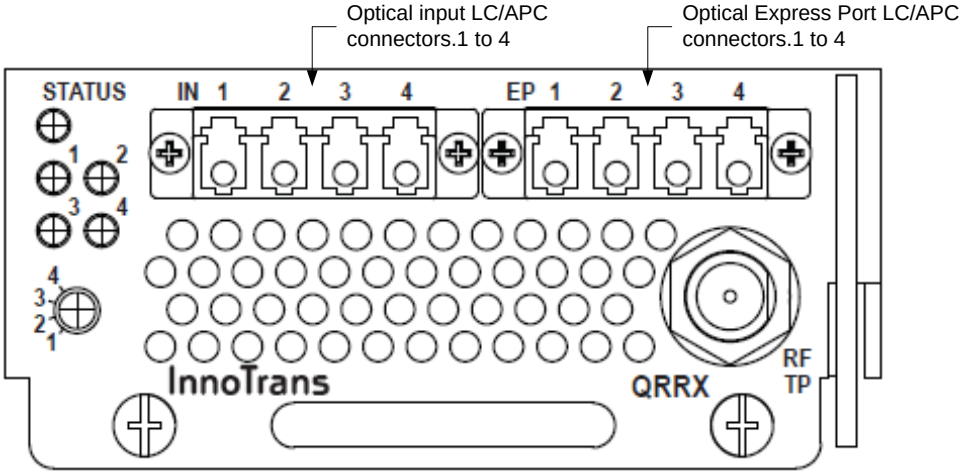

1) Ensure the optical LC/APC connector is clean prior to connecting to the CF-QRRX ports. Check the optical level with a power meter to be certain it is within the operational range of the receiver and closely matches your network design. If a discrepancy exists, troubleshoot the optical network path before proceeding.
2) Once the levels are verified, connect each cleaned connector to the associated receiver optical input port. You should observe the optical input LED change from Red to Green if a signal is present.
3) If utilizing the optional express ports, connect a power meter to the express port with a clean LC/APC jumper and verify the level of the desired optical signal.

8. Module Setup

Please refer to the instructions below and the ChromaFlex User Interface Guide (DOC# 99-01-0001) for details on configuring the CF-QRRX return receiver module setup for optimal performance with the Hand Held Display or GUI.

8.1. Setup

1. Identify the CF-QRRX unit at the corresponding slot location.
2. Connect the input port (labeled IN) utilizing a good quality clean LC/APC connector to the next device or fiber cable per your specific design schematic drawing.
3. Set Mode to *AGC* (Default) or *MGC*.
4. If *AGC* mode is used the unit will optimize itself for optimal gain depending on the optical input level. (Refer to section 4.)
5. If set to *MGC,* first measure your optical input level. Add 2 dB of RF Attn to every 1 dB of power above -12 dBm (CF-QRRX-S) or -25 dBm (CF-QRRX-H). Example: optical input = -7 dBm equals a 5 dB delta between -7 dBm and -12 dBm. Set Attn value to 10 dB.

9. Troubleshooting the CF-QRRX return receiver module

Condition	Steps to Check
Power LED OFF (AC)	1) Check if Power Cable is plugged in and Power Switch is in ON position. 2) Verify AC Outlet is Functional and confirm fuse on the AC feed is fine, replacing it if necessary. 3) Look for other signs of life in unit like running fan, LCD display etc.
Power LED OFF (DC)	1) Verify DC Feed is active and fuse is intact on fuse panel. 2) Verify DC Feed is not reversed. 3) Look for other signs of life in unit like running fan, LCD display etc.
Optical input LED is Amber or Red	1) Check Optical input level. 2) Check for dirty optical connectors.
No RF output is present	1) Check Optical input level. 2) Check if output attenuator is present 3) Check attn. setting if in MGC mode.
Communication Issue with Unit	1) Please confirm setup is as described in the User Interface document 2) If problem persists, please contact InnoTrans for further help.