Assembly Instructions CF-TFP-KIT

Assembly instructions for attaching the CF-TFP-KIT Tilt Fiber Protection bar to the ChromaFlex chassis. Kit contents: 2 support brackets, 1 tilt fiber protection cover, 2 support bracket ears with screw standoffs, and 8 screws.

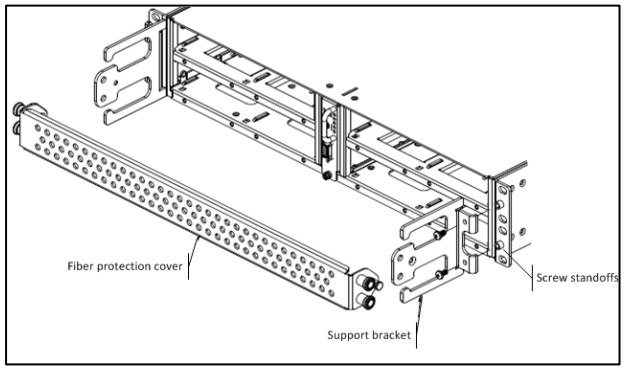

1) Attach the support bracket to the chassis rack mount ear screw standoffs, utilizing four screws (2 per side), supplied in the kit.

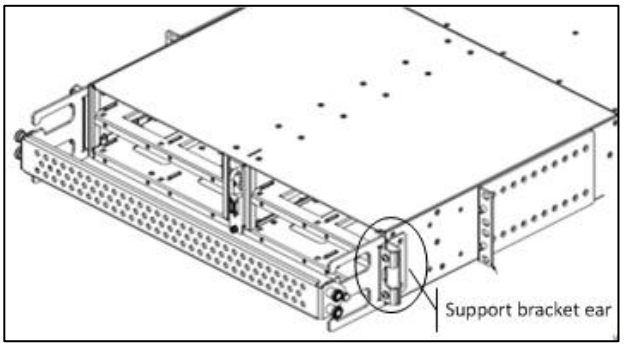

2) In the case of mid-mount installations attach the two support bracket ears in place of the relocated standard rack mount ear.

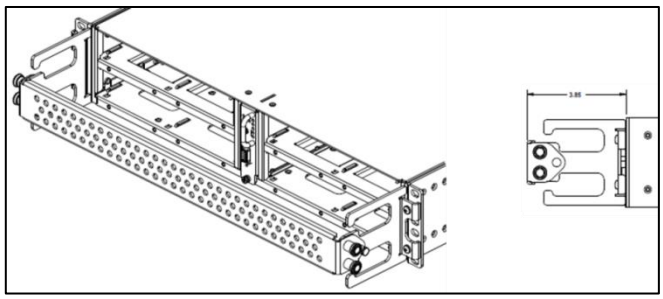

3) To attach the Front Protection Cover pull the 6 locking pins out, turning each ¼ turn clockwise, locking them in the out position.

Place the Front Protection Cover over the center flange of the Fiber Management Ear and turn ¼" counterclockwise, locking them in place.

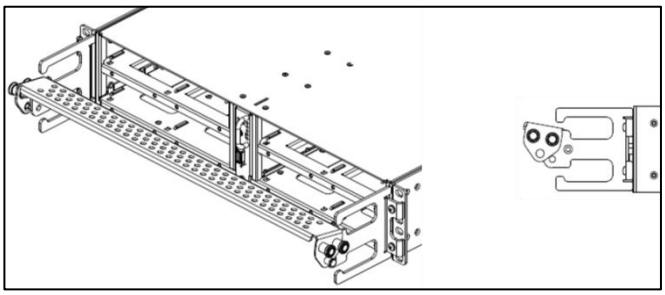

4) To tilt the Front Protection Cover up, pull the upper and center pin of each side out and turn ¼"clockwise, locking them in the out position. Tilt the panel up, rotating on the top pin. Turn the center pin ¼" counterclockwise to lock the cover in the up position. To lower, pull out center pins and rotate down.

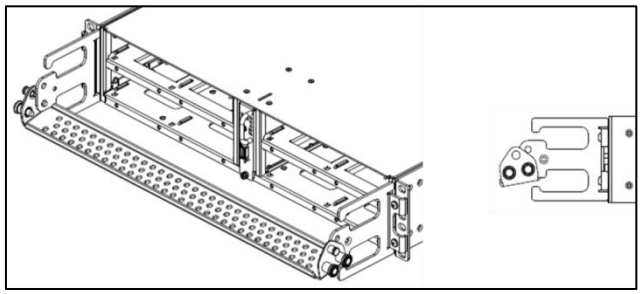

5) To tilt the Front Protection Cover down, pull the lower and center pin of each side out and turn ¼" clockwise, locking them in the out position. Tilt the panel down, rotating on the bottom pin. Turn the center pin ¼" counterclockwise to lock the cover in the down position. To raise, pull out the center pins and rotate up.