ChromaFlex

EDFA Optical Amplifier Modules:

Applications:

- Headend launch amplifier to maximize network reach
- Lower wavelength with higher launch power

Features:

- Low noise performance
- Constant gain or constant power operation
- Multiple gain & total power options
- Integrated filter or circulator based express ports
- One-slot ChromaFlex module
- Up to eight modules in a single 2RU ChromaFlex chassis
- SNMP, Telnet or web GUI remote monitoring

EDFA Optical Amplifier (front view)

Two versions of EDFA modules are offered in the ChromaFlex platform. A very cost-effective, constant power version (CPA) & a highly featured configurable version (GCA) for constant gain or constant power mode.

Both models are gain flattened for multi-wavelength application & provide superb noise figure performance. The combination of the CCT4 high OMI operating point & low noise performance of the EDFA minimizes the EDFA MER contribution even at very low optical input levels.

ChromaFlex CF-GCA EDFA
The CF-GCA EDFA is a high density, single-slot module which can be configured to operate in a constant gain or constant power mode with the default mode being constant gain for multi-wavelength operation. As wavelengths are added, the gain per wavelength remains constant & the composite total output power will vary to maintain consistent optical levels on a per wavelength basis ensuring network performance.

ChromaFlex CF-CPA EDFA
The CF-CPA EDFA operates in a fixed constant output power mode for single wavelength or applications where the number of wavelengths is fixed.

Functional Schematics

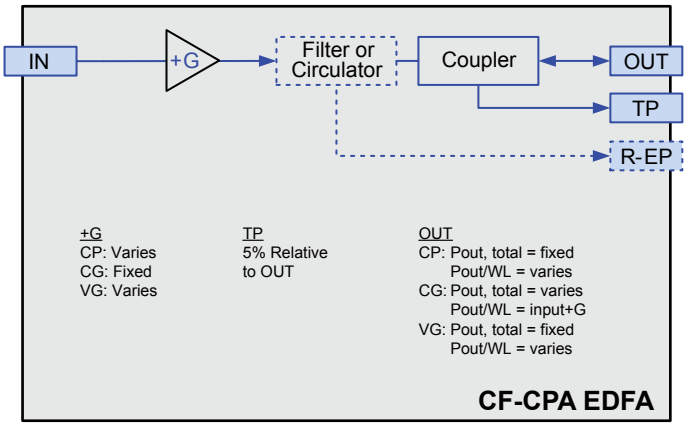

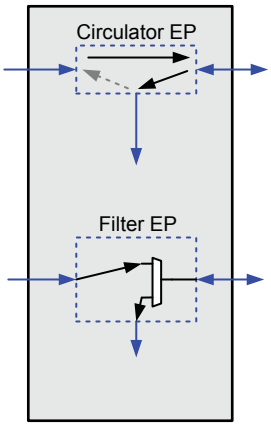

EDFA Optical Amplifier Modules:

EDFA Optical Amplifier Specifications

SPECIFICATIONS	CF-CPA-0018-10	CF-GCA-0615-10	CF-GCA-0921-10
OPTICAL			
OUTPUT POWER(1)	18 dBm	15 dBm	21 dBm
GAIN	Constant Power	6 dB	9 dB
GAIN FLATNESS	± 0.75 dB		
OUTPUT POWER VARIATION	± 0.2 dB		
AMPLIFIED PASSBAND	1530-1562nm		
NOISE FIGURE (at 0 dBm Input)	< 4.5 dB Typ. (if total power > 23 dBm, then NF < 5.5 dB)		
OPTICAL INTERFACES	LC/APC (default)		
OPTICAL RETURN LOSS	> 50 dB		
INPUT POWER RANGE(1)	-3 to +8 dBm		
OUTPUT TEST POINT	5%		
ELECTRICAL			
POWER CONSUMPTION	7W	10W	12W
MANAGEMENT	Local Craft, SNMP v2c, CLI, GUI, Telnet		
ENVIRONMENTAL			
OPERATING TEMPERATURE	0ºC to +50ºC (+32ºF to +122ºF)		
STORAGE TEMPERATURE	-40ºC to +85ºC (-40ºF to +185ºF)		
HUMIDITY	5-85% Non-condensing		
PHYSICAL			
DIMENSIONS(2)	1.7"H x 3.7"W x 14.4"D (4.3H x 9.4W x 37.0D cm)		
WEIGHT	1.5 lbs (0.7 kg)		

NOTES:
(1) Maximum total composite power.
(2) If total power > 23 dBm, then dual-slot ChromaFlex module.

Ordering Information

Optical Amplifier CF-Gained Flattened EDFAs

Part Number Format: CF_ _ _ - _ _ _ _ - _ _
a b c d e f g

Example: CF-CPA-0018-10 +18 dBm Constant Total Output Power EDFA, with One Output & No Reflector Port, LC/APC
CF-GCA-0421-10 +4 dB Gain EDFA with +21 dBm Total Output Power Max., with One Output & No Reflector Port, LC/APC

a = Amplifier Type	bc = Gain in dB (Set to 00 for CPA, Variable Gain)	f = # Output Ports
CPA	de = Total Output Power in dBm	1 = One Output
GCA		2 = Two Outputs
VGA		4 = Four Outputs
		g = Return Reflector Port Type
		0 = None
		R = Circulator Type
		E = Filter Type

Specifications subject to change without notice.

powered by InnoTrans

5850 Hellyer Avenue, San Jose, CA 95138 USA
Tel (408) 227-2400 Fax (408) 227-3403
www.atxnetworks.com opticalsales@atxnetworks.com

Printed in Canada
Rev. 03/17 (ANW1174)