Q-SERIES® Optical

Fiber Optic Products

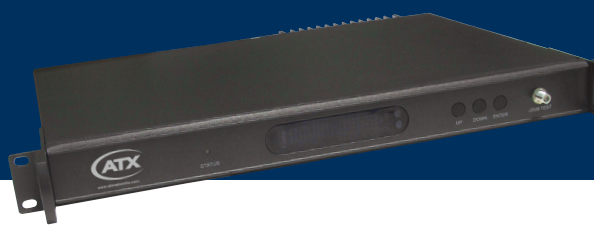

QFOT 1550nm Fiber Optic Transmitter:

Features:

- 10mW output power in 1RU
- Primarily used for TV video signals, digital TV signals & data signals transported over fiber
- Powering by 90-265 VAC (50/60 Hz) or -48 VDC
- 1550 ± 10nm wavelength
- Can accommodate up to 11 dB path loss without EDFA
- High performance DFB direct modulated laser, advanced pre-distortion circuit & digital automatic processing techniques
- Microprocessor monitoring system automatically ensures excellent performance
- Accepts 47-870 MHz at levels from 15-25 dBmV (AGC/MGC)
- Electronic level setting & adjustments

QFOT (front view)

QFOT (rear view)

QFOT 1550nm Specifications

SPECIFICATIONS	QFOT1550-D-10
OPTICAL POWER	10mW
OPTICAL LINK PATH LOSS	11 dB
OPTICAL WAVELENGTH	1555nm +/- 10
TYPE OF LASER	14-pin Cooled DFB Laser in Butterfly Package with Isolator
OPTICAL MODULATION MODE	Direct Modulation
OPTICAL CONNECTOR TYPE	SC/APC
FREQUENCY RANGE	50-870 MHz (1000 MHz Optional)
RF INPUT LEVEL	15-25 dBmV
FLATNESS IN BAND	+/- 0.75 dB
RF INPUT IMPEDANCE	75 Ω
INPUT REFLECTION LOSS	≥ 16 dB (50-870/1000) MHz
C/COMP. TR. BT.	≥ 65 dB
C/COMP. 2nd ORD.	≥ 59 dB
CARRIER-TO-NOISE RATIO	≥ 51 dB
AGC CONTROL RANGE	0-15 dB
MGC CONTROL RANGE	0-15 dB
POWER VOLTAGE	100-240 VAC (50/60 Hz)
POWER CONSUMPTION	15W
OPERATION TEMPERATURE	0°C to +50°C (+32°F to +122°F)
STORE TEMPERATURE	-40°C to +85°C (-40°F to +185°F)
RELATIVE HUMIDITY	Max 95% Non-condensing
DIMENSIONS	1.75"H x 19.0"W x 15.0"D (4.45H x 48.26W x 38.1D cm)
WEIGHT	11.0 lbs (5.0 kg)

Optical Link Path C/N Specifications

OPTICAL LINK PATH C/N SPECIFICATIONS	
OPTICAL LOSS (dB)	11
QFOT1550-D-10	51

Specifications subject to change without notice.

QFOT 1550nm Fiber Optic Transmitter:

Ordering Information

Part Number	Description
QFOT1550-D-10	Optic Transmitter, 870 MHz, 1550nm, DFB, SC/APC, 10mW

Functional Schematic

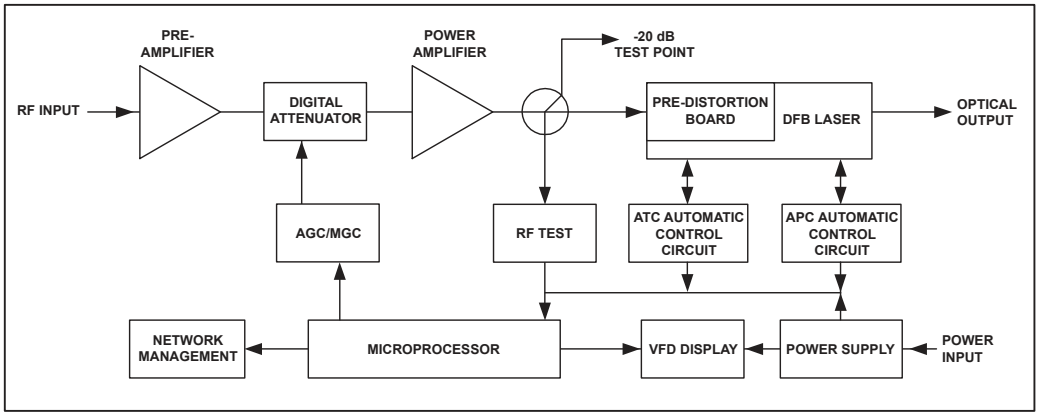

Q-Series® is a registered trademark of ATX in the United States and/or other countries. Products or features contained herein may be covered by one or more U.S. or foreign patents. Other non-ATX product and company names mentioned in this data sheet are the property of their respective companies.

Specifications subject to change without notice.

ISO 9001 REGISTERED

1-501 Clements Road West, Ajax, ON L1S 7H4 Canada
Tel (905) 428-6068 Toll Free (800) 565-7488 Fax (905) 427-1964 Toll Free Fax (866) 427-1964
www.atxnetworks.com support@atxnetworks.com